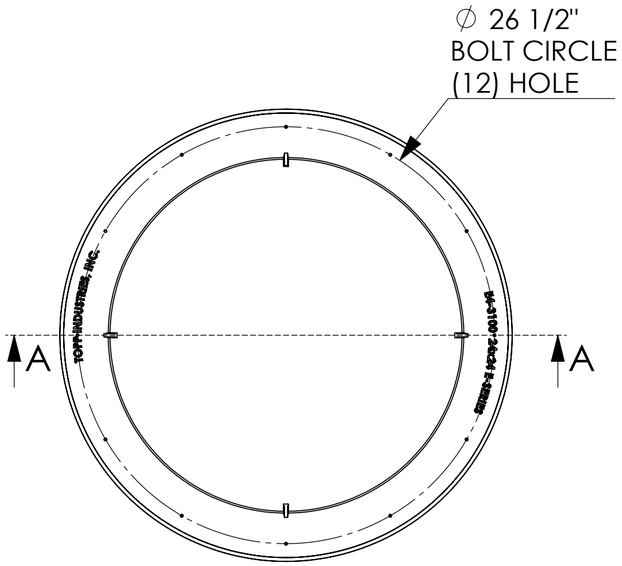


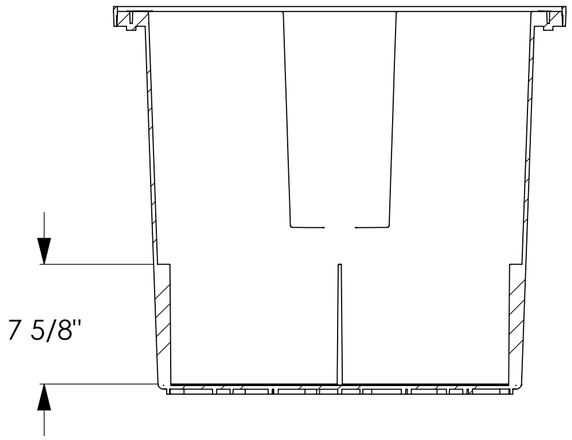


SECTION A-A

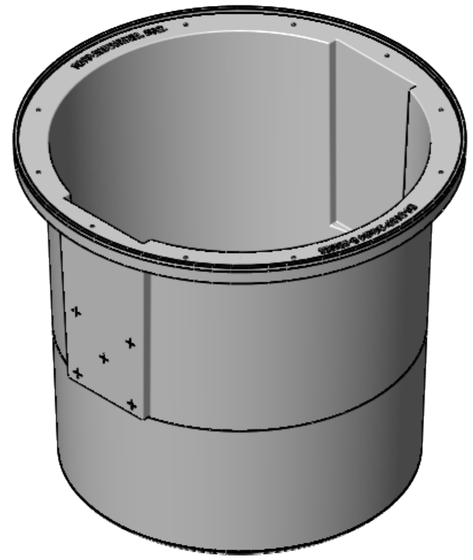

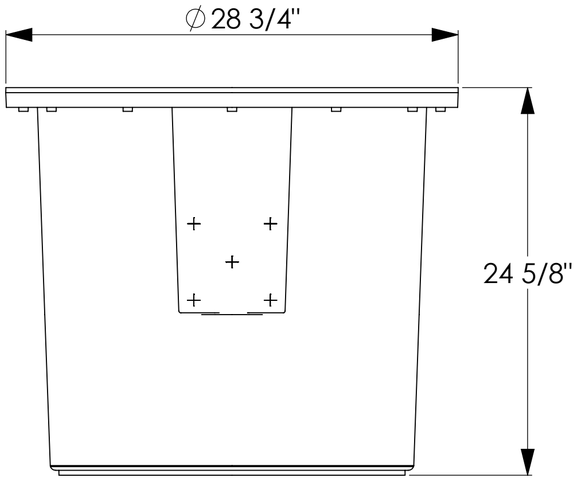


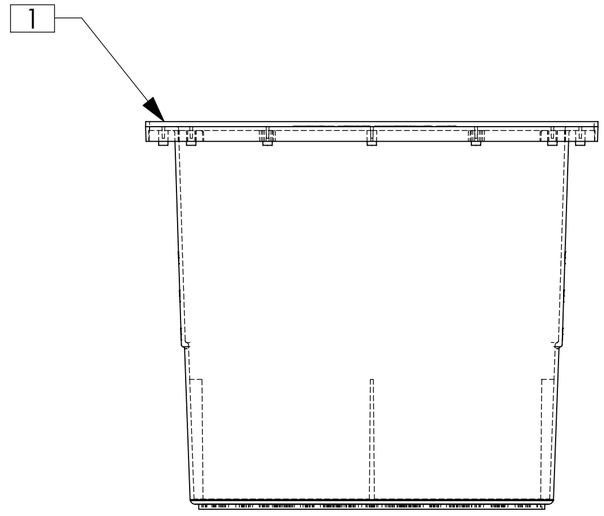


NOTE: WEIGHT = 22.25 LBS
GALLONS = 45.15

| ITEM NO. | PART NUMBER | DESCRIPTION | QTY. |
|---|---|---|---|
| 1 | E4-3100 24x24 BASIN | E-SERIES 24 X 24 BASIN | 1 |
| | G400 | 4" GROMMET | 1 |

UNLESS OTHERWISE SPECIFIED:
DIMENSIONS ARE IN MILLIMETERS
SURFACE FINISH:
TOLERANCES:
LINEAR:
ANGULAR:

PUMP & DISCONNECT:

SO:

PO:

DO NOT SCALE DRAWING

REVISION 01

| | NAME | DATE |
|---|---|---|
| DRAWN | GH | 06/10/2021 |
| CHK'D | GH | 06/10/2021 |
| APPV'D | | |
| MFG | | |
| Q.A | | |

MATERIAL:

WEIGHT:

TITLE:

24x24 E-Series Basin with 4" Grommet
UNDRILLED

DWG NO. E4-3100UD

A2

SCALE:1:7

SHEET 1 OF 1

TOPP INDUSTRIES INCORPORARED
P.O. BOX 420 ^ HWY. 25 N.
ROCHESTER, IN. 46975
(800) 354-4534 FAX: (574) 223-6106