ITEM NO.	PART NUMBER	DESCRIPTION	QTY.
1	SINK TRAY BASIN_3	BASIN	1
2	SINK TRAY LID_3^SINK TRAY BASIN_3	LID	1
3	HNUT 0.2500-20-D-S	1/4"-20 HEX NUT SS	8
4	.25 SS FLAT WASHERS	1/4" FLAT WASHER SS	8
5	.25-20X 1 SS HEX BOLT	1/4"-20 X 1" HEX BOLT SS	8
6	Sink Tray Gasket	LID GASKET (NOT SHOWN)	1

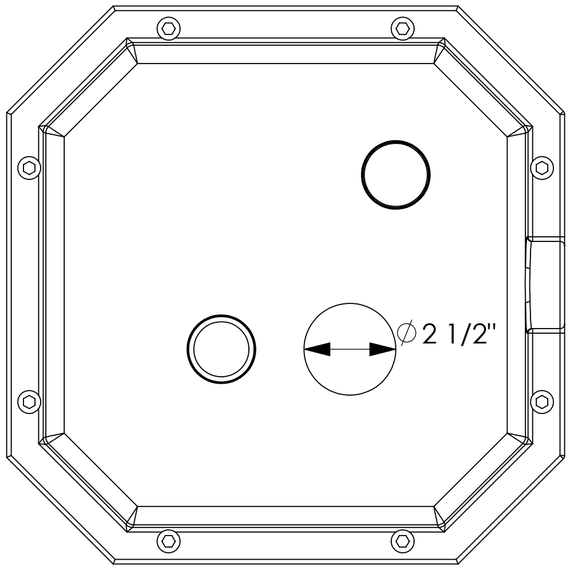

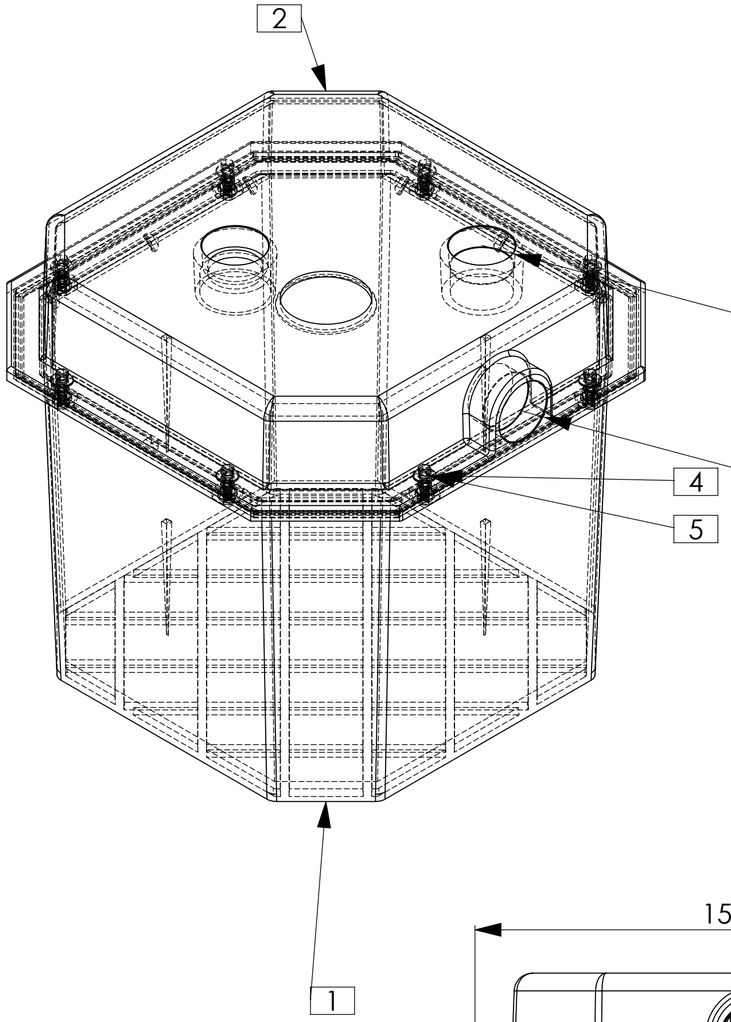

2 x ∅ 1 3/4" THRU ALL
1-1/2 NPT
⌵ ∅ 1 7/8" X 90°, Near Side

∅ 1 3/4" ↧ 2"
1-1/2 NPT
⌵ ∅ 1 7/8" X 90°, Near Side

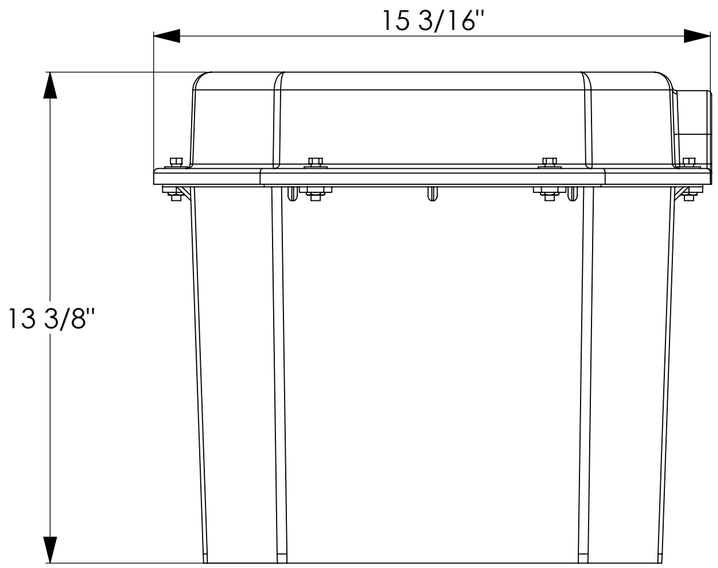

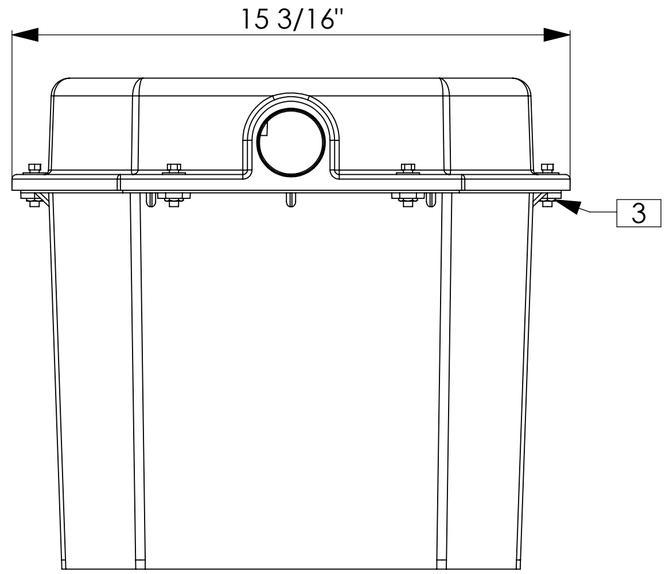

UNLESS OTHERWISE SPECIFIED:
DIMENSIONS ARE IN MILLIMETERS
SURFACE FINISH:
TOLERANCES:
LINEAR:
ANGULAR:

PUMP & DISCONNECT:

SO: PO:

DO NOT SCALE DRAWING

REVISION +

	NAME	DATE
DRAWN	CB	05/30/2018
CHK'D	-	-
APPV'D		
MFG		
Q.A		

MATERIAL: STRUCTURAL FOAM

WEIGHT:

TITLE: SINK TRAY CUBE

DWG NO. E1-B1100

A2

SCALE:1:5

SHEET 1 OF 1

TOPP INDUSTRIES INCORPORARED
P.O. BOX 420 ^ HWY. 25 N.
ROCHESTER, IN. 46975
(800) 354-4534 FAX: (574) 223-6106